Product datasheet

DK-50-XX-LENS-Yi Series

DARKOO® Optics
Tel: (86)760-85332970 Fax: (86)760-85335526
地址: 广东省中山市翠亨新区纬十二路达尔科工业园
E-mail: darkoo@darkoo.cc
Website: http://www.darkoo.cc
Tel: (86)760-85332970 Fax: (86)760-85335526
Address: DARKOO Industrial Park Wei 12 Road Tsuihang New District Zhongshan City, Guangdong. China
E-mail: darkoo@darkoo.cc Website: http://www.darkoo.cc

Contents

Product datasheet 1
Contents 2
Part number explanation 3
General information 4
Matched COB 5
Photometric data (Simulated) 6-7
Dimension 8-10
Packing information 11

DARKOO® Optics
Tel: (86)760-85332970 Fax: (86)760-85335526
地址: 广东省中山市翠亨新区纬十二路达尔科工业园
E-mail: darkoo@darkoo.cc
Website: http://www.darkoo.cc
Tel: (86)760-85332970 Fax: (86)760-85335526
Address: DARKOO Industrial Park Wei 12 Road Tsuihang New District Zhongshan City, Guangdong. China
E-mail: darkoo@darkoo.cc Website: http://www.darkoo.cc

Part number explanation

DK - 72- GSZ - H22 - XU

D1 D2 D3 D4 D5

D1：Company code（DARKOO）

D2：Diameter

D3：Product type： Antidazzle Cover

D4：Height

D5：Series（XU Series)

DK - 50 - XX- LENS -YI

D1 D2 D3 D4 D5

D1：Company code（DARKOO）

D2：Diameter

D3：Angle（15°、24°、36°、60°）

D4：Product type：LENS

D5：Series（WING Series)

DK - 50 - ZJ - YI - Zhaga

D1 D2 D3 D4 D5

D1：Company code（DARKOO）

D2：Diameter

D3：Product type：LENS HOLDER

D4：Series（WING Series)

D5：Zhaga Standard

DK - 35 - XX - ZJ - Zhaga

D1 D2 D3 D4 D5

D1：Company code（DARKOO）

D2：Diameter

D3：COB (1313、1515、1304）

D4：Product type：COB HOLDER

D5：Zhaga Standard

General information

❖ **Features**

- 4 different angles
- Zhaga Standard
- High compatibility of installation
- Compatible with multi color temperature
- High Extensibility

❖ **Applications**

- spotlight

❖ **Material information**

- Antidazzle Cover：PC　Lens ：PMMA　LENS Holder：PC　COB Holder：PC
- The working temperature is：PMMA -40ºC～+90º C、PC-35ºC～+120º C
- Storage environment temperature is 0º C～40º C，humidity is 30%~95%

❖ **Application Notes**

- Please use a litter water and soft fabric (air-laid paper) to clean the lens　if necessary.
- Forbid to use industrial solvent to clean the lens, such as alcohol.
- Optic Lens has the function to change the ray of light, it is made of optical material, the effect shall be influenced once pollute. Please do not open the packing before use it，to avoid the dust pollution.
- Protect the product from the sun and other ultraviolet ray, as these will lead to aging, change color, crack, etc.
- Please ware gloves once install the lens, avoid to abrasion the lens surface.
- Forbid to use acidic or alkaline solution touch the product, avoid to generate the chemical reactions.

Matched COB

1、PCB dimension：13.5*13.5 LENS 9.8

2、PCB dimension：15.85*15.85 LENS 9

Photometric data (Simulated)

Picture	Item No	Angle	Matched COB
	DK-50-15-LENS-Yi	18.8°	CITIZEN：CLL022
	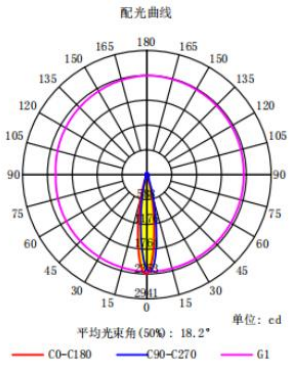		
	Photometric data (Simulated)		

Picture	Item No	Angle	Matched COB
	DK-50-24-LENS-Yi	26.5°	CITIZEN：CLL022
	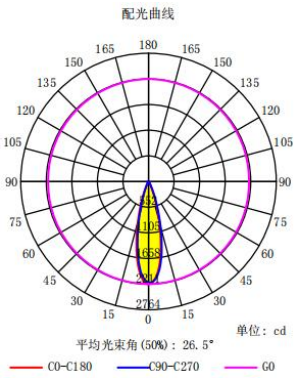		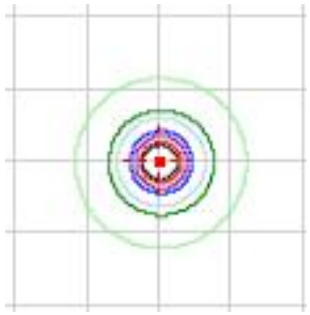
	Photometric data (Simulated)		

Photometric data (Simulated)

Picture	Picture	Item No	Angle
	DK-50-36-LENS-Yi	38.9°	CXA1304
	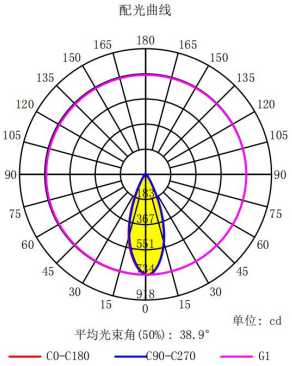	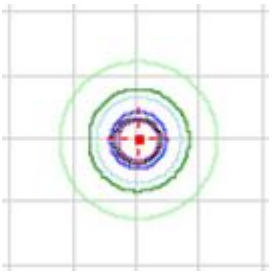	
	Photometric data (Simulated)		

Picture	Picture	Item No	Angle
	DK-50-60-LENS-Yi	61.4°	CXA1304
	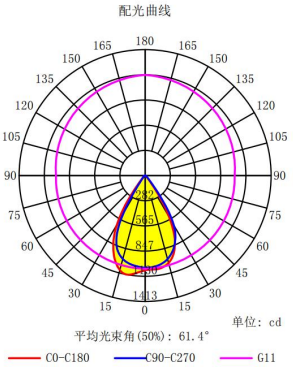	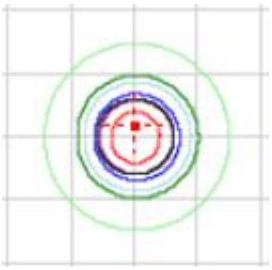	
	Photometric data (Simulated)		

Dimension

1、Installation method：Screw

2、Antidazzle Cover dimension

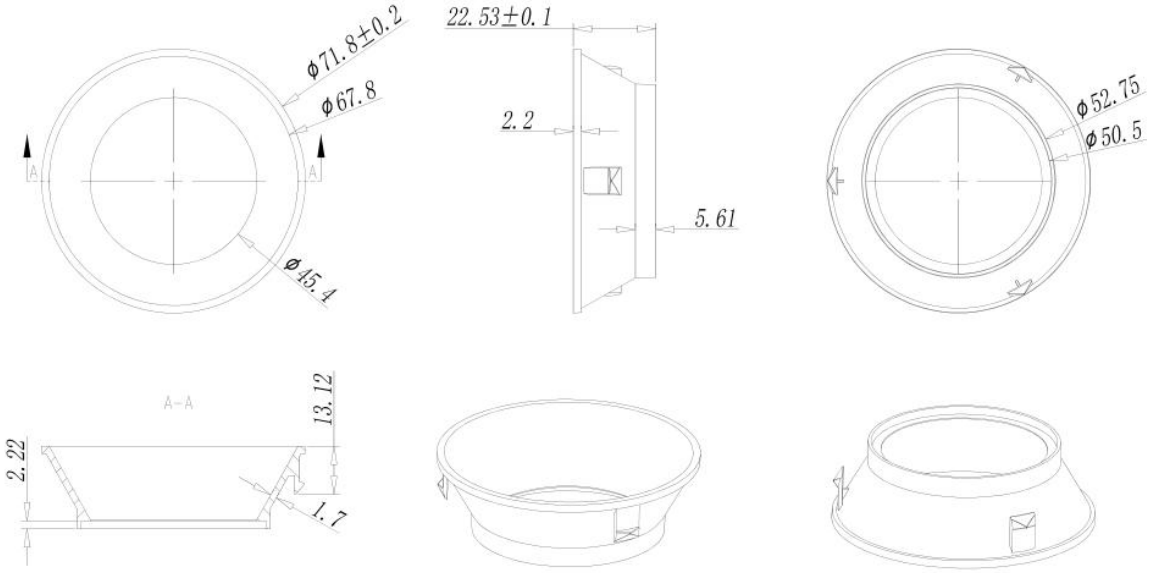

3、Lens dimension

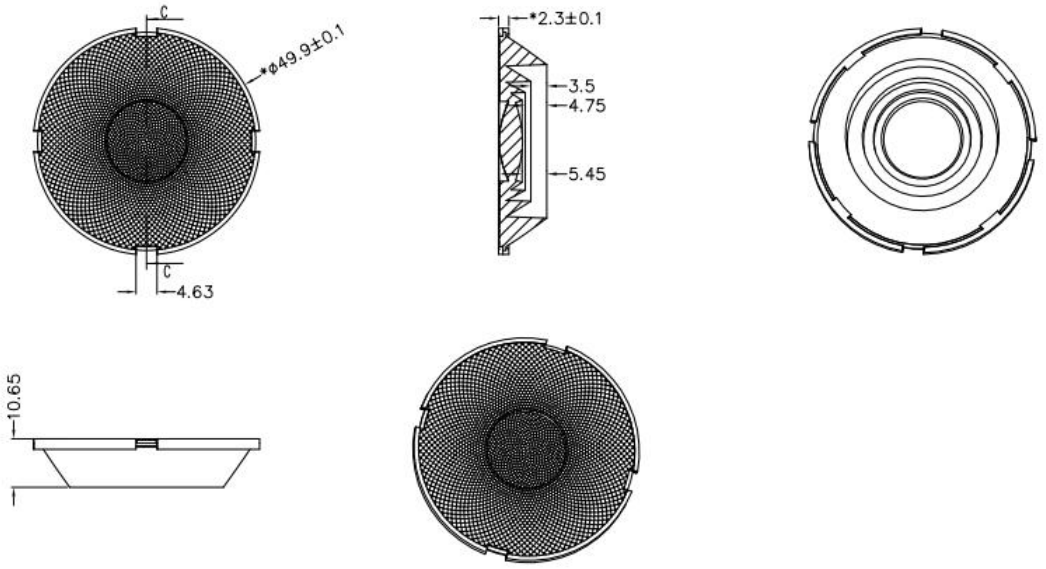

4、LENS Holder dimension

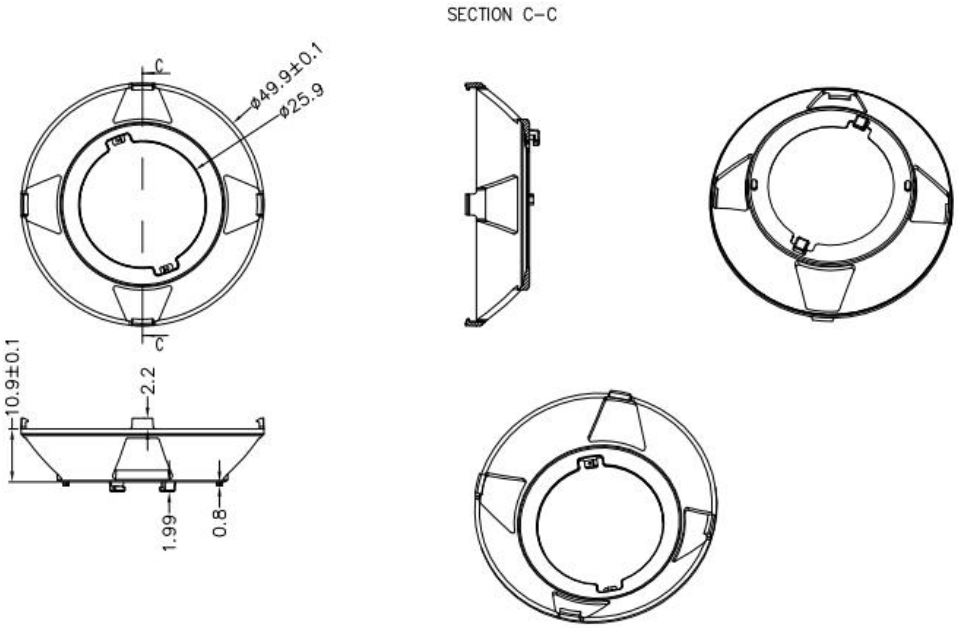

5、COB Holder dimension

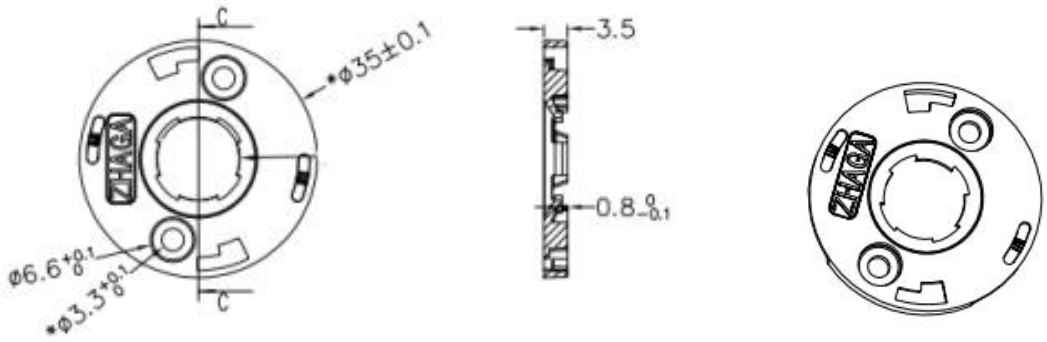

6、 Installation guide

Packing information

Item No	Material	Size	Quantity
DK-50-XX-LENS-Yi	Box	320*245*115MM	216PCS
	Carton	510*330*255MM	864PCS
DK-50-ZJ-Yi-Zhaga	Plastic bag	300*350MM	400PCS
	Carton	510*330*255MM	2400PCS
DK-35-XX-ZJ-Zhaga	Plastic bag	300*350MM	500PCS
	Carton	510*330*255MM	6000PCS

DARKOO® Optics
Tel: (86)760-85332970 Fax: (86)760-85335526
地址: 广东省中山市翠亨新区纬十二路达尔科工业园
E-mail: darkoo@darkoo.cc
Website: http://www.darkoo.cc
Tel: (86)760-85332970 Fax: (86)760-85335526
Address: DARKOO Industrial Park Wei 12 Road Tsuihang New District Zhongshan City, Guangdong. China
E-mail: darkoo@darkoo.cc Website: http://www.darkoo.cc